Ultra LOW CAPACITA NCE TVS ARRAY

EBLC03 thru EBLC24C

The EBLCxx and EBLCxxC Series are ultra low capacitance transient voltage suppressor arrays, designed to protect applications such as portable electronics and SMART phones. This series is available in both unidirectional and bidirectional configurations and is rated at 350 Watts for an 8/20 μs waveshape.

The EBLCxx and EBLCxxC Series meets IEC 61000-4-2 (ESD) and IEC 61000-4-4 (EFT) requirements. At higher operating frequencies or faster edge rates, insertion loss and signal integrity are a major concern. This series offers a ultra low capacitance and low leakage current in a miniature SOD-323 package.

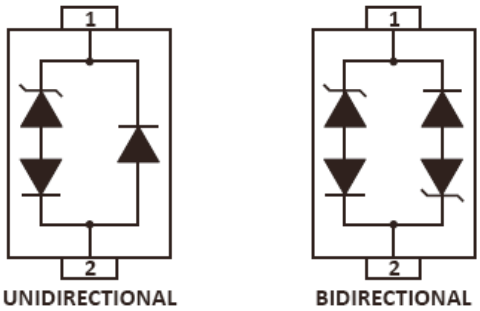

SOD323 package

FEATURES

- Compatible with IEC 61000-4-2 (ESD): Air - 15kV, Contact - 8kV Exceeds Level 4: Handles 10kV Contact & 25kV Air Discharge
- Compatible with IEC 61000-4-4 (EFT): 40A - 5/50ns
- Compatible with IEC 61000-4-5 (Surge)
- 350 Watts Peak Pulse Power per Line (tp = 8/20 μs)
- Replacement for MLV (0805)
- Unidirectional & Bidirectional Configuration
- Protects One Power or I/O Port
- ESD Protection > 25kV
- Low Clamping Voltage
- Available in Multiple Voltages Ranging From 3V to 24V
- Ultra Low Capacitance: 3pF (Typical)
- RoHS Compliant
- REACH Compliant

MECHANICAL DATA

- Molded JEDEC SOD-323 Package
- Approximate Weight: 5 milligrams
- Lead-Free Pure-Tin Plating (Annealed)
- Solder Reflow Temperature: Pure-Tin - Sn, 100: 260-270°C
- 8mm Tape and Reel Per EIA Standard 481
- Flammability Rating UL 94V-0

Application

- Ethernet 10/100/1000 Base T
- SMART Phones
- Handheld - Wireless Systems
- USB Interface

MAXIMUM RATINGS AND ELECTRICAL CHARACTERISTICS

Maximum Ratings (Tc=25°C unless otherwise noted)

Parameter	Symbol	EBLC	Unit
Peak Pulse Power (tp = 8/20µs)	Ppk	350	W
Operating Temperature	TJ	-55 to +125	°C
Storage Temperature	TSTG	-55 to +150	°C

ELECTRICAL CHARACTERISTICS PER LINE @ 25°C Unless Otherwise Specified

PART NUMBER (Note 1 -2)	DEVICE MARKING	RATED STAND-OFF VOLTAGE V_{WM} VOLTS	MINIMUM BREAKDOWN VOLTAGE @ 1mA $V_{(BR)}$ VOLTS	MAXIMUM CLAMPING VOLTAGE (Fig. 2) @ IP = 1A V_C VOLTS	MAXIMUM LEAKAGE CURRENT @V_{WM} I_D µA	TYPICAL CAPACITANCE @0V, 1MHz C pFE
EBLC03	3	3.3	4.0	7.0	5	3E
EBLC03C	3C	3.3	4.0	7.0	5	3EE
EBLC05	5	5.0	6.0	9.8	5	3E
EBLC05C	5C	5.0	6.0	9.8	5	3E
EBLC08	8	8.0	8.5	13.4	2	3E
EBLC08C	8C	8.0	8.5	13.4	2	3EE
EBLC12	2	12.0	13.3	19.0	1	3
EBLC12C	2C	12.0	13.3	19.0	1	3E
EBLC15	6	15.0	16.7	24.0	1	3E
EBLC15C	6C	15.0	16.7	24.0	1	3E
EBLC24	4	24.0	26.7	43.0	1	3
EBLC24C	4C	24.0	26.7	43.0	1	3

NOTES
1. Part numbers with an additional "C" suffix are bidirectional devices, i.e., EBLC05C.
2. Unidirectional Only: Positive potential is applied from pin 1 to 2.

TYPICAL DEVICE CHARACTERISTICS

FIGURE 1
PEAK PULSE POWER VS PULSE TIME

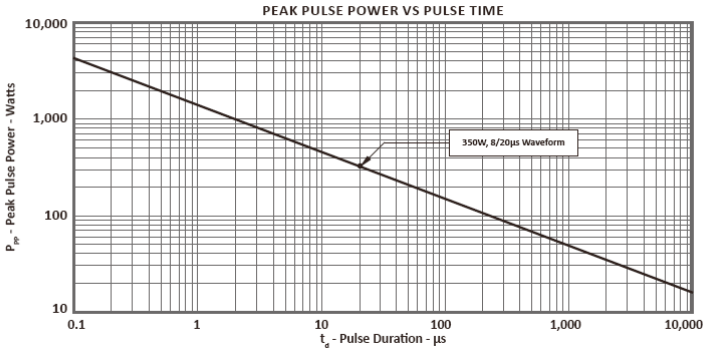

FIGURE 2
PULSE WAVE FORM

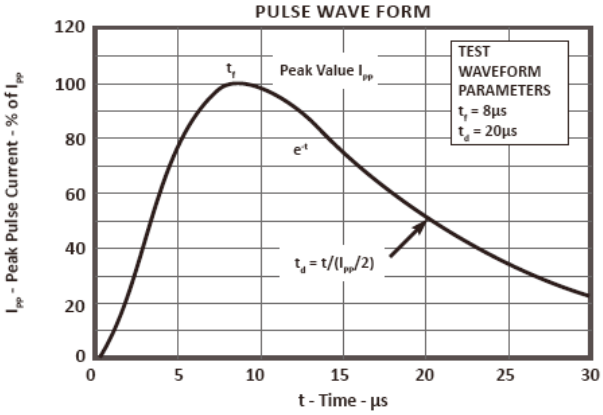

SOD-323 package Information

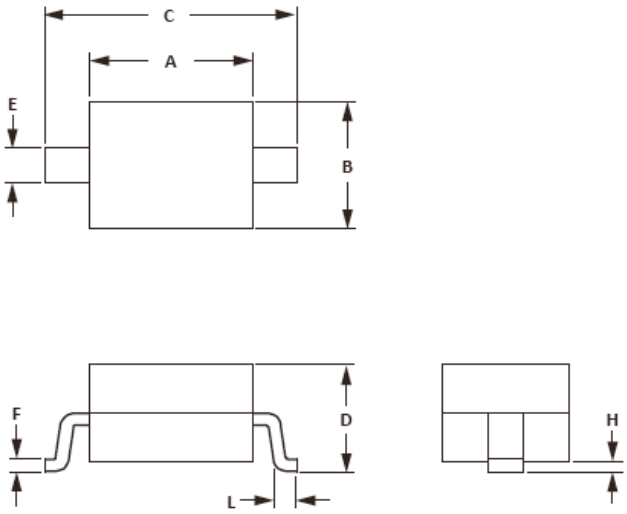

OUTLINE DIMENSIONS				
DIM	MILLIMETERS		INCHES	
	MIN	MAX	MIN	MAX
A	1.60	1.90	0.063	0.075
B	1.15	1.45	0.045	0.057
C	2.39	2.70	0.094	0.106
D	0.80	1.10	0.031	0.043
E	0.25	0.40	0.010	0.016
F	0.10	0.20	0.004	0.008
H	-	0.10	-	0.004
L	0.20	-	0.008	-

NOTES
1. Controlling dimension: millimeters.
2. Dimensioning and tolerances per ANSI Y14.5M, 1985.
3. Dimensions are exclusive of mold flash and metal burrs.